Cambridge Assessment International Education

Cambridge IGCSE®

CANDIDATE NAME	

CENTRE NUMBER						CANDIDATE NUMBER				

PHYSICS **0625/04**

Paper 4 Theory (Extended) **For examination from 2020**

SPECIMEN PAPER

1 hour 15 minutes

Candidates answer on the question paper.

No additional materials are required.

READ THESE INSTRUCTIONS FIRST

Write your centre number, candidate number and name on all the work you hand in.
Write in dark blue or black pen.
You may use an HB pencil for any diagrams, graphs or rough working.
Do not use staples, paper clips, glue or correction fluid.
DO **NOT** WRITE IN ANY BARCODES.

Answer **all** questions.
Electronic calculators may be used.
You may lose marks if you do not show your working or if you do not use appropriate units.
Take the weight of 1.0 kg to be 10 N (acceleration of free fall = 10 m/s^2).

At the end of the examination, fasten all your work securely together.
The number of marks is given in brackets [ ] at the end of each question or part question.

This document consists of **17** printed pages and **1** blank page.

© UCLES 2017

www.root19.com +91 - 9969 353 391

1 Fig. 1.1 shows the speed-time graph for a car travelling along a straight road.

The graph shows how the speed of the car changes as the car passes through a small town.

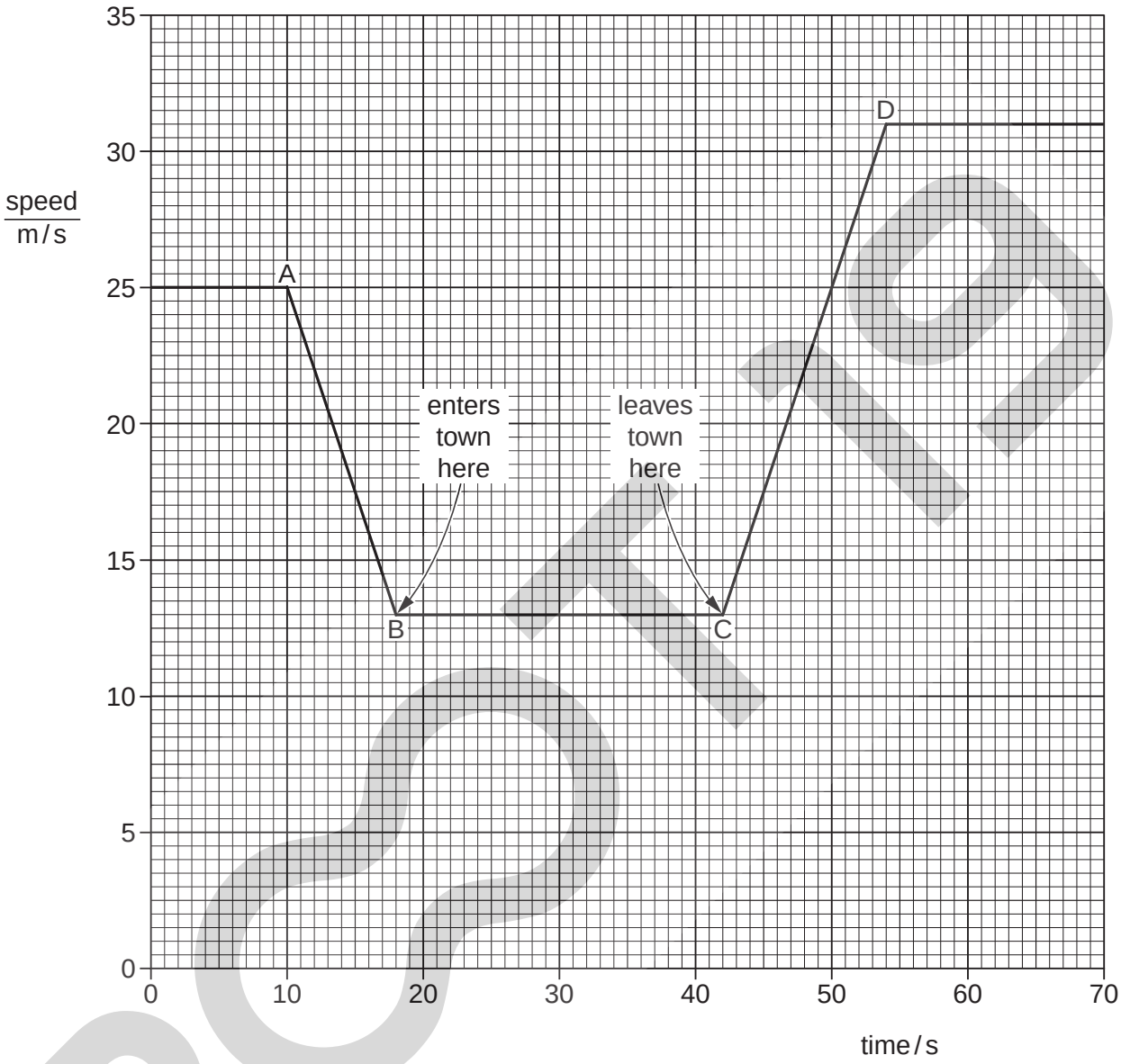

Fig. 1.1

(a) Calculate the distance between the start of the town and the end of the town.

distance = ... [3]

(b) Calculate the acceleration of the car between C and D.

acceleration = ... [3]

(c) State how the graph shows that the deceleration of the car has the same numerical value as its acceleration.

.....

..... [1]

[Total: 7]

© UCLES 2017
www.root19.com

+91 - 9969 353 391

2 Fig. 2.1 shows a conveyor belt transporting a package to a raised platform. The belt is driven by a motor.

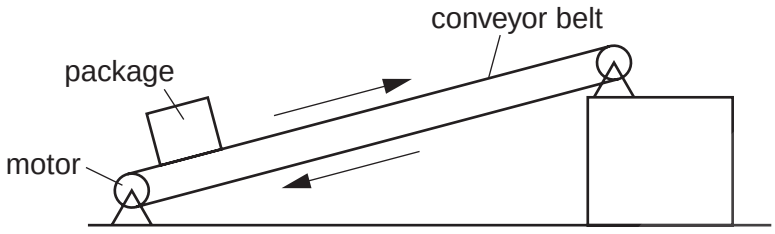

Fig. 2.1

(a) The mass of the package is 36 kg.

Calculate the increase in the gravitational potential energy (g.p.e.) of the package when it is raised through a vertical height of 2.4 m.

increase in g.p.e. = ... [2]

(b) The package is raised through the vertical height of 2.4 m in 4.4 s.

Calculate the power needed to raise the package.

power = ... [2]

(c) The electrical power supplied to the motor is much greater than the answer to **(b)**.

Explain how the principle of conservation of energy applies to this system.

.....

.....

..... [2]

www.root19.com +91 - 9969 353 391

(d) Assume that the power available to raise packages is constant. A package of mass greater than 36 kg is raised through the same height.

Suggest and explain the effect of this increase in mass on the operation of the conveyer belt.

.....

.....

.....

.....

..... [3]

[Total: 9]

© UCLES 2017
www.root19.com

+91 - 9969 353 591

3 The engine of an unpowered toy train is rolling at a constant speed on a level track, as shown in Fig. 3.1. The engine collides with a stationary toy truck, and joins with it.

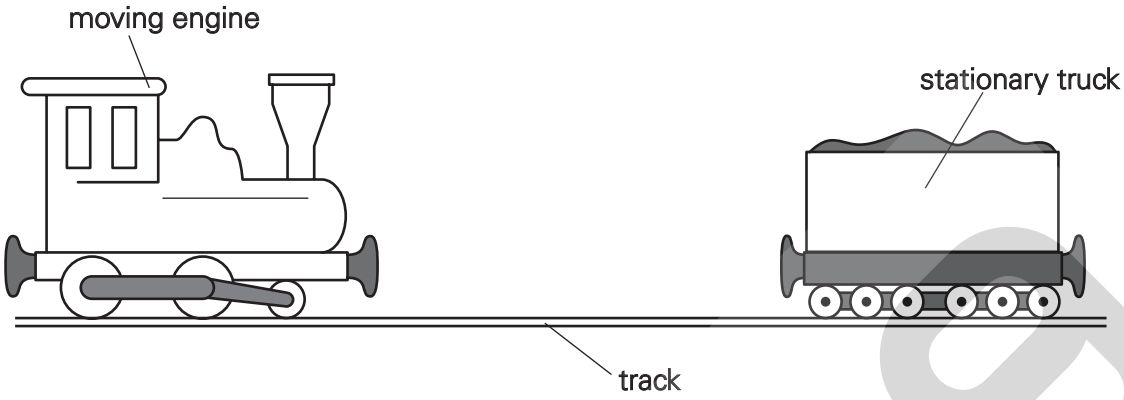

Fig. 3.1

Before the collision, the toy engine is travelling at 0.32 m/s. The mass of the engine is 0.50 kg.

(a) Calculate the momentum of the toy engine before the collision.

momentum = ... [2]

(b) The mass of the truck is 0.30 kg.

Using the principle of conservation of momentum, calculate the speed of the joined engine and truck immediately after the collision.

speed = ... [3]

[Total: 5]

www.root19.com +91 - 9969 353 391

BLANK PAGE

© UCLES 2017
www.root19.com

+91 - 9969 353 591

4 A solar panel is mounted on the roof of a house. Fig. 4.1 shows a section through part of the solar panel.

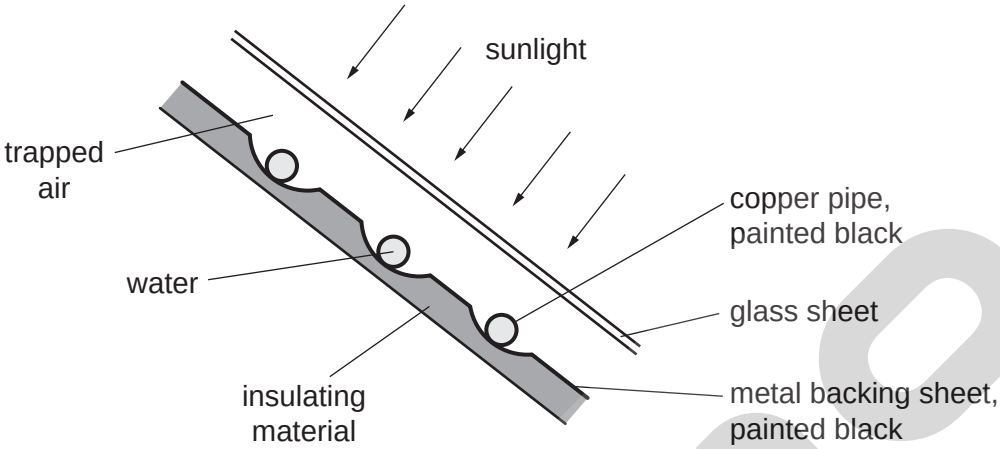

Fig. 4.1

A pump makes water flow through the copper pipes. The water is heated by passing through the solar panel.

(a) Select and explain **three** features of the solar panel that maximise the final temperature of the water.

.....

.....

.....

.....

.....

.....

.....

.....

..... [4]

www.root19.com +91 - 9969 353 391

(b) During one day, 250 kg of water is pumped through the solar panel. The temperature of this water rises from 16 °C to 38 °C.

The water absorbs 25 % of the energy incident on the solar panel. The specific heat capacity of water is 4200 J / (kg °C).

Calculate the energy incident on the solar panel during that day.

energy = ... [4]

(c) The solar panel in Fig. 4.1 is designed to heat water.

A person is deciding whether to install solar panels on her house.

List and explain **three** pieces of information she needs to consider in order to make her decision.

.....

.....

.....

.....

.....

.....

..... [4]

(d) The Sun releases energy as a result of nuclear fusion.

State the meaning of *nuclear fusion*.

.....

..... [2]

[Total: 14]

© UCLES 2017
www.root19.com

+91 - 9969 353 591

5 Fig. 5.1 shows a gas contained in a cylinder enclosed by a piston.

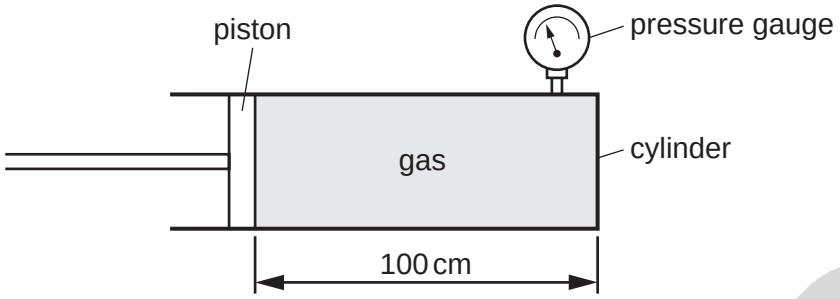

Fig. 5.1

At first, the length of cylinder containing the gas is 100 cm. The pressure of the gas, shown by the pressure gauge, is 300 kPa. The area of cross-section of the cylinder is 0.12 m^2.

(a) **(i)** Describe the motion of the molecules of the gas.

.....

.....

..... [1]

(ii) Use the idea of momentum to explain how the molecules exert a force on the walls of the cylinder.

.....

.....

.....

..... [2]

www.root19.com +91 - 9969 353 391

(b) The piston is moved so that the new length of cylinder occupied by the gas is 40 cm. The temperature of the gas is unchanged.

(i) Calculate the new pressure of the gas.

pressure = ... [2]

(ii) Explain, in terms of the behaviour of the molecules, why the pressure has changed.

.....

.....

..... [2]

[Total: 7]

© UCLES 2017
www.root19.com

+91 - 9969 353 391

6 Fig. 6.1 shows a scale drawing of plane wavefronts approaching a gap in a barrier.

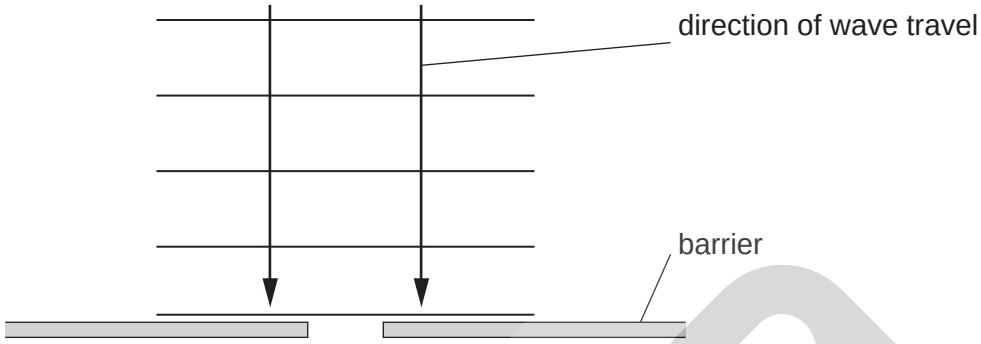

Fig. 6.1

(a) On Fig. 6.1, draw the pattern of the wavefronts after the wave has passed through the gap. [2]

(b) The wave approaching the barrier has a wavelength of 2.5 cm and a speed of 20 cm / s.

Calculate the frequency of the wave.

frequency = ... [2]

(c) State what happens, if anything, to the frequency of the wave as it passes through the gap.

..... [1]

www.root19.com +91 - 9969 353 391

(d) Explain, in terms of diffraction, why a car radio may pick up low frequency radio signals but not pick up high frequency radio signals when the car is travelling behind a hill.

.....

.....

..... [2]

[Total: 7]

© UCLES 2017
www.root19.com

+91 - 9969 353 391

7 The circuit of Fig. 7.1 includes an immersion heater and a 6.0 V battery.

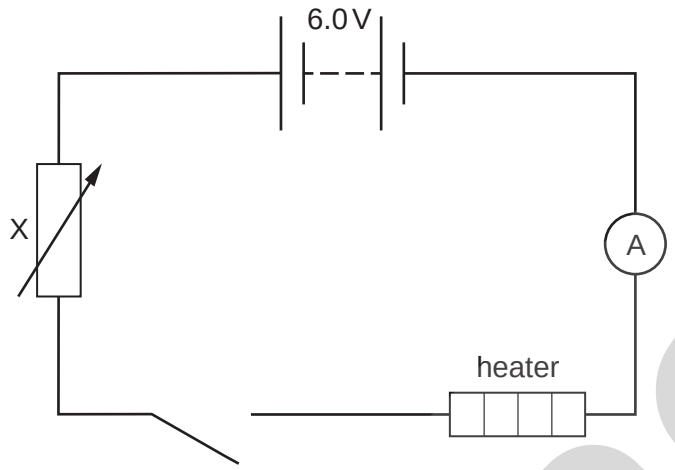

Fig. 7.1

(a) State the name and purpose of component X.

name .....

purpose .....

[1]

(b) The heater is designed to work from a 3.6 V supply. It has a power rating of 4.5 W at this voltage.

By considering the current in the heater, calculate the resistance of component X when there is the correct potential difference across the heater.

resistance = ... [5]

(c) Some time after the heater is switched on, the ammeter reading is seen to have decreased.

Suggest why this happens.

.....

..... [2]

[Total: 8]

www.root19.com +91 - 9969 353 391

8 Fig. 8.1 is a schematic diagram of an electronic circuit controlling a lamp.

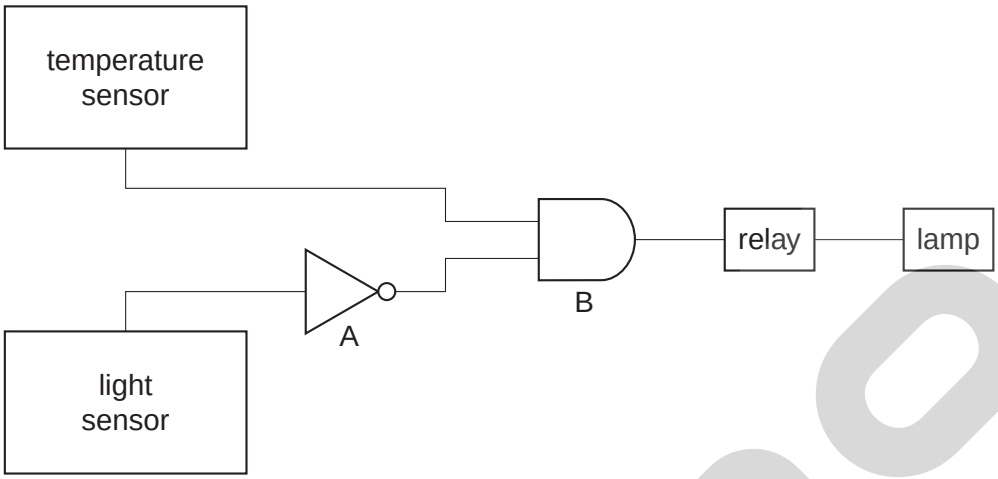

Fig. 8.1

The output of the temperature sensor is high (logic 1) when it detects raised temperatures. The output of the light sensor is high (logic 1) when it detects raised light levels.

The lamp is lit when the input to the relay is high (logic 1).

(a) Complete the truth table by giving the outputs of A and B.

output of light sensor	output of temperature sensor	output of A	output of B
0	0		
0	1		
1	0		
1	1		

[2]

(b) State the conditions under which the lamp is lit.

..... [1]

(c) Suggest why B is connected to a relay, rather than directly to the lamp.

.....

..... [2]

[Total: 5]

www.root19.com +91 - 9969 353 591

9 A plastic rod is rubbed with a cloth and becomes positively charged. After charging, the rod is held close to the suspended table-tennis ball shown in Fig. 9.1. The table-tennis ball is covered with metal paint and is uncharged.

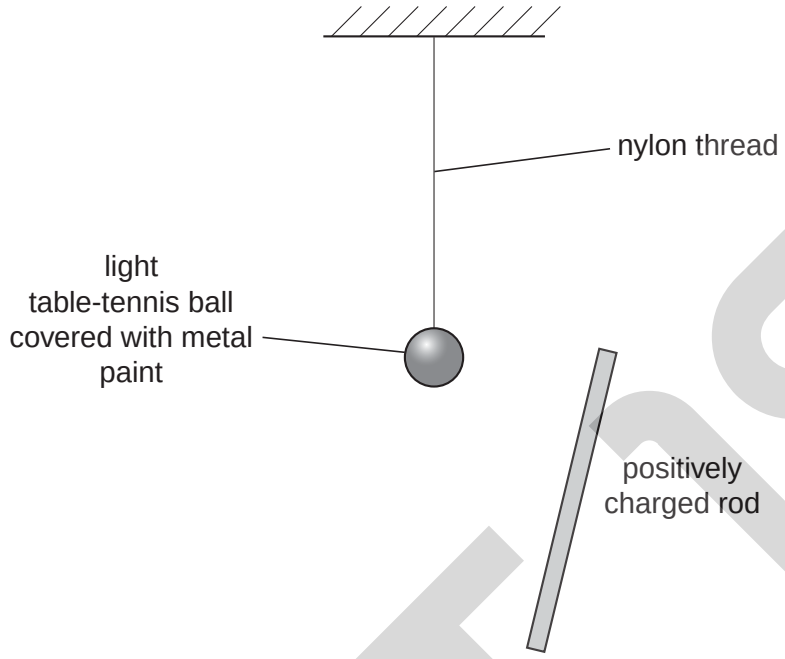

Fig. 9.1

(a) Describe what happens to the charges in the metal paint on the ball as the positively charged rod is brought close to the ball.

.....

.....

..... [1]

(b) The ball is attracted towards the charged rod.

Explain why this happens, given that the ball is uncharged.

.....

.....

..... [2]

(c) State the unit in which electric charge is measured.

..... [1]

[Total: 4]

www.root19.com +91 - 9969 353 391

10 Emissions from a radioactive source pass through a hole in a lead screen and into a magnetic field, as shown in Fig. 10.1. The experiment is carried out in a vacuum.

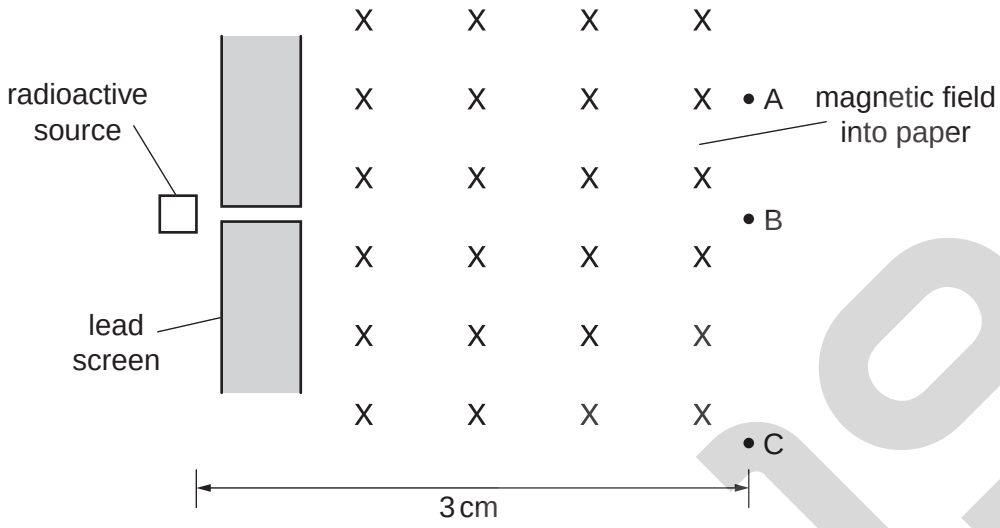

Fig. 10.1

Radiation detectors are placed at A, B and C. They give the following readings:

A	B	C
32 counts / min	543 counts / min	396 counts / min

The radioactive source is then completely removed, and the readings become:

A	B	C
33 counts / min	30 counts / min	31 counts / min

From the data given for positions A, B and C, deduce the type of emissions coming from the radioactive source. Explain your reasoning.

.....

.....

.....

.....

.....

.....

.....

.....

..... [7]

[Total: 7]

www.root19.com +91 - 9969 353 591

11 In Geiger and Marsden's α-particle scattering experiment, α-particles were directed at a very thin gold foil.

Fig. 11.1 shows five of the nuclei of the atoms in one layer in the gold foil. Also shown are the paths of three α-particles directed at the foil.

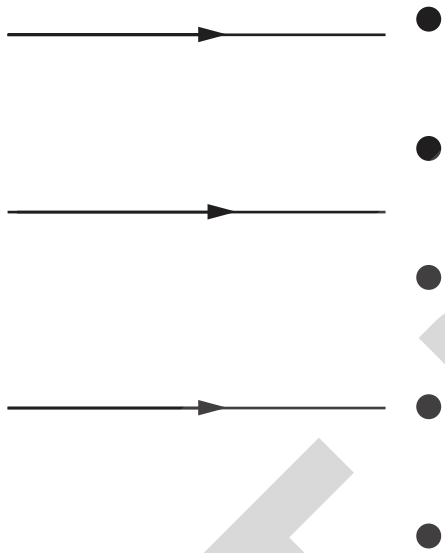

Fig. 11.1

(a) On Fig.11.1, complete the paths of the three α-particles. [3]

(b) **(i)** State the result of the experiment that shows that an atom consists of a very tiny, charged core, containing almost all the mass of the atom.

.....

..... [1]

(ii) State the sign of the charge on this core. ..... [1]

(iii) State what occupies the space between these charged cores.

..... [1]

(c) The nuclide notation for an α-particle is $^{4}_{2}\alpha$.

State the number of protons and neutrons in an α-particle

protons = ...

neutrons = ... [1]

[Total: 7]

Permission to reproduce items where third-party owned material protected by copyright is included has been sought and cleared where possible. Every reasonable effort has been made by the publisher (UCLES) to trace copyright holders, but if any items requiring clearance have unwittingly been included, the publisher will be pleased to make amends at the earliest possible opportunity.

Cambridge Assessment International Education is part of the Cambridge Assessment Group. Cambridge Assessment is the brand name of University of Cambridge Local Examinations Syndicate (UCLES), which is itself a department of the University of Cambridge.

www.root19.com +91 - 9969 353 391